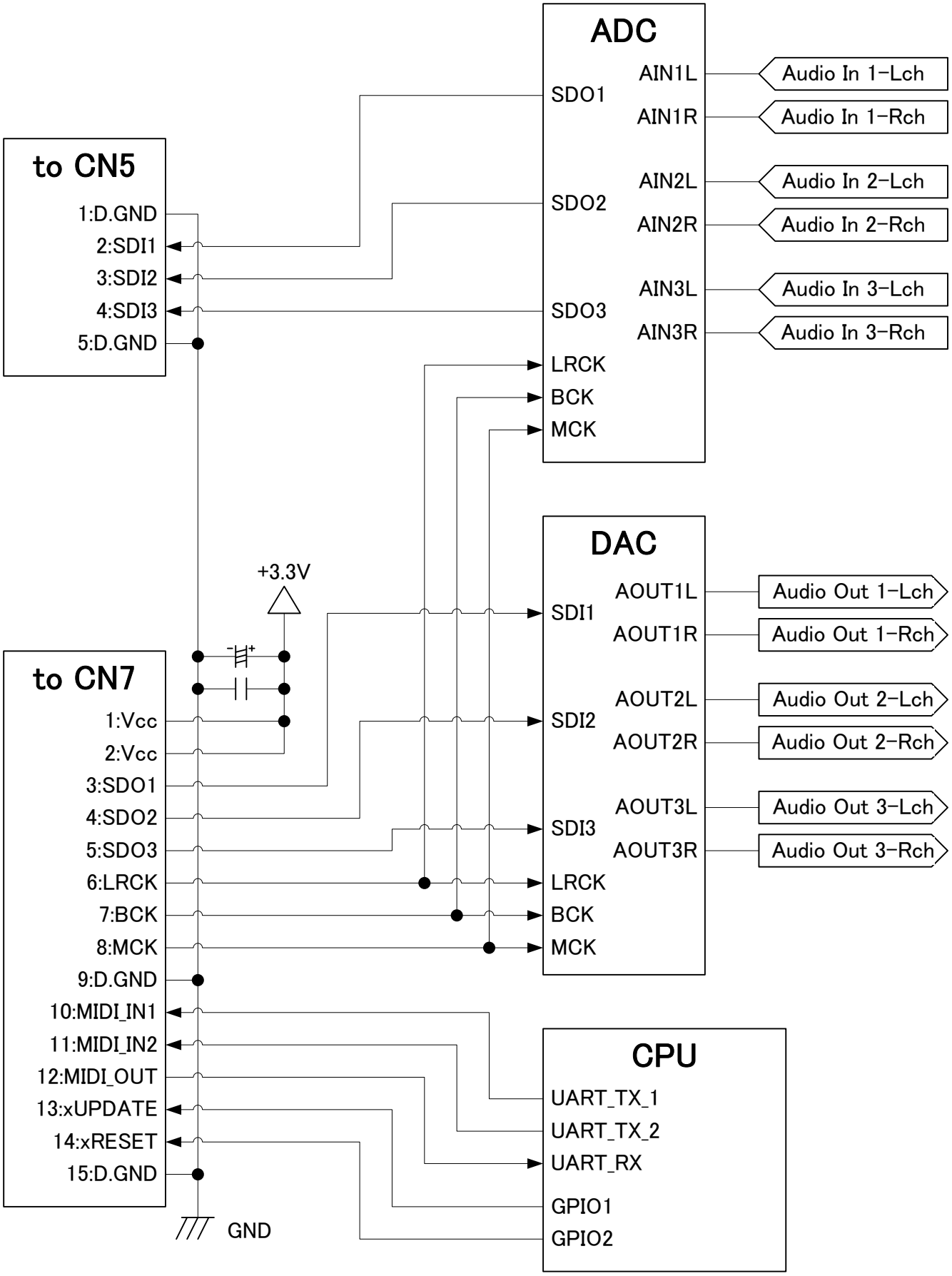01-SCH-R Sample Connection